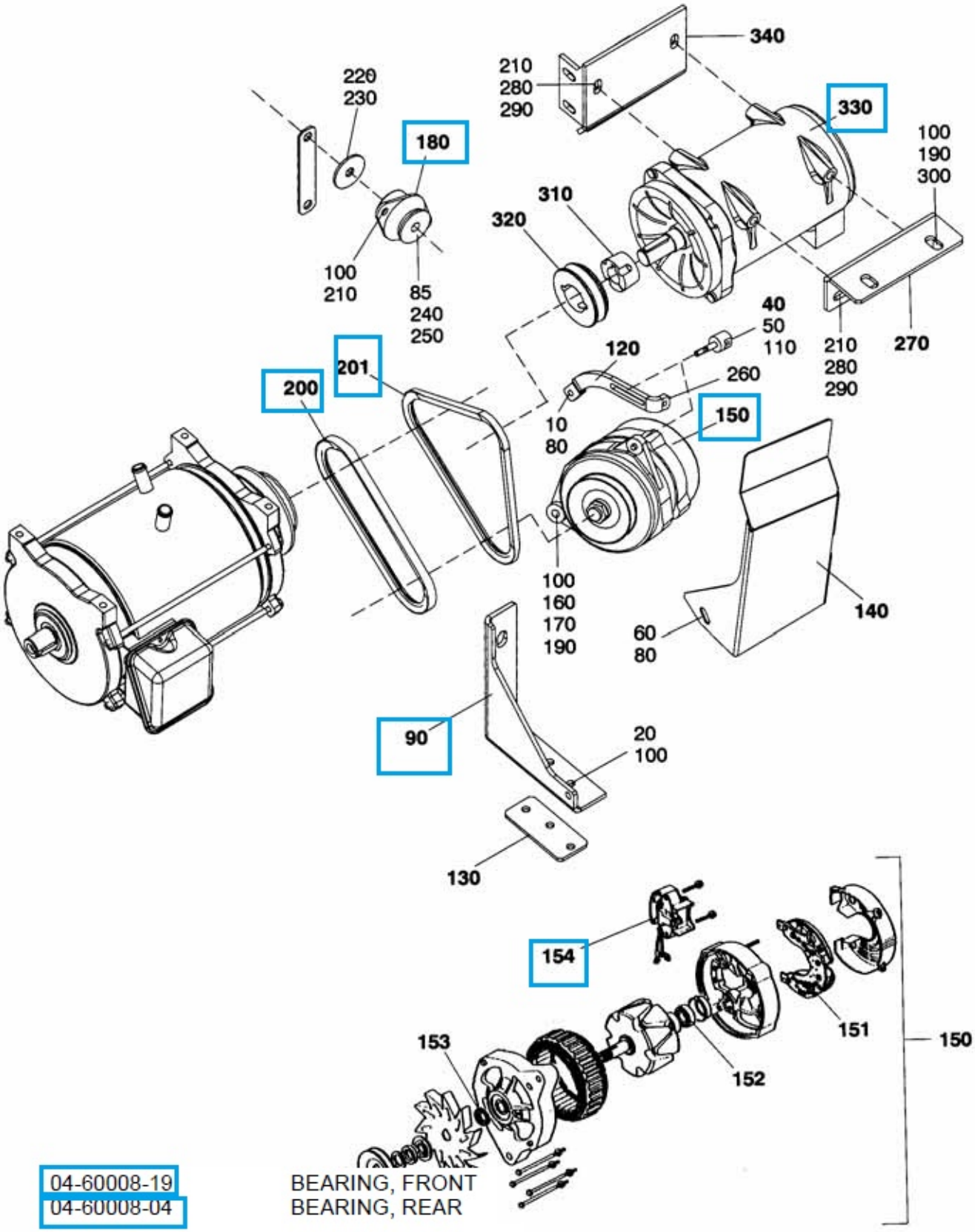

04-60008-19 BEARING, FRONT
04-60008-04 BEARING, REAR